HYDRAVISION™ HDIS

A New Digital Urology Solution by DEL MEDICAL, Formerly Manufactured by LF™, Liebel-Flarsheim™

DEL MEDICAL

a Guerbet Group Company

LF™ and Liebel-Flarsheim™ are registered trademarks of Liebel-Flarsheim Company, LLC. The trademark holder is not affiliated with Del Medical Inc.

System Overview
HYDRAVISION™

The real-time digital fluoroscopic and radiographic x-ray imaging system is uniquely equipped with a table that has a 750 lb (340 kg) weight rating and a dual-monitor arm mount. Its moving imaging system allows the patient to remain stationary during sensitive procedures. This versatile system, paired with the powerful Nexus DR digital acquisition system is suitable for urological, and gastroenterological, planning, and diagnostic procedures.

Key Highlights

- Flexible Functionality
- Workstation Reimagined
- HD Compatible
- X-Ray and Positioning Foot Pedals
- Synchronous and Independent Positioning
- Unmatched Panel Resolution

System Overview
FEATURES

Lower X-Ray Dosing

- Updated grids aid in dose reduction by reducing scatter radiation.
- The 100% carbon fiber grid absorbs less X-rays than previous-generation aluminum grids, requiring a lower X-ray dose to obtain a quality image, potentially reducing exposure to the patient.

One-Touch Interface

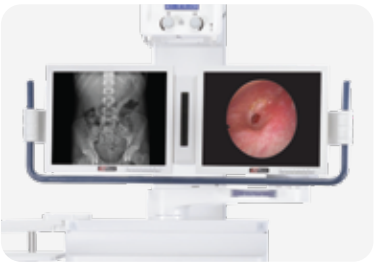

- Streamlined system interface improves system reliability and workflow efficiency.
- A single-touch monitor displays all controls, messages, and alarms, freeing up space in your control room.

Improved Fluoro Image Quality with Higher Resolution

- System features a detector with smaller pixels than previous generations for higher resolution, resulting in sharper, more defined images.
- Surgical-grade HD monitors use 16-bit image processing.

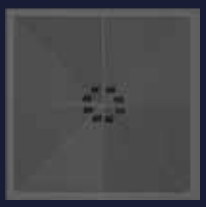

Image captured with **previous-generation** Hydra Vision™ DDIS system

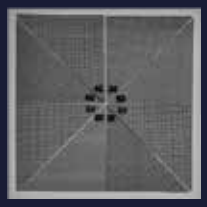

Image captured with Hydra Vision™ HDIS System

Foot Pedals for Control, Comfort and Ease

- X-ray foot switch provides enhanced comfort and ease.
- Foot pedal control for anatomical targeting and recall, with an additional pedal for table elevation and tilt range.
- Additional foot pedal control for fluoroscopic and radiographic imaging allowing for magnification and the ability to quick save images to the patient folder.
- Store button gives the ability to save images to the patient folder from the foot pedal and recall.

THE DIFFERENCE IS IN THE DETAILS.

The Hydra Vision™ Digital Imaging System is engineered to streamline workflow and improve efficiency in urological imaging.

System Overview

ACCESSORIES

These accessories are engineered to provide optimal interface and seamless integration

Leg Crutch Accessories

- Adult Pad/Post
- Black Fin Boot Stirrup
- Pneumatic Under-calf Leg Crutches

Support Pads

- 12 in (30.5 cm)
- 24 in (61 cm)
- 43 in (109 cm) Standard

Table Rails Accessories

- Armboard (Standard)
- IV Stanchion
- Universal Clamps

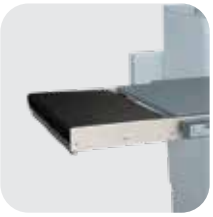

Table Extensions

- 24 in (61 cm) Standard
  - 12 in (30.5 cm) addition optional

Patient Support Devices

- Hand Grips
- Patient Restraint Straps
- Shoulder Support

Urodynamics

- Chair
- Foot Step
- Cart

Component Accessibility

- HDIS Workstation Cart
- Side Shelf Unit

Accessory Cart

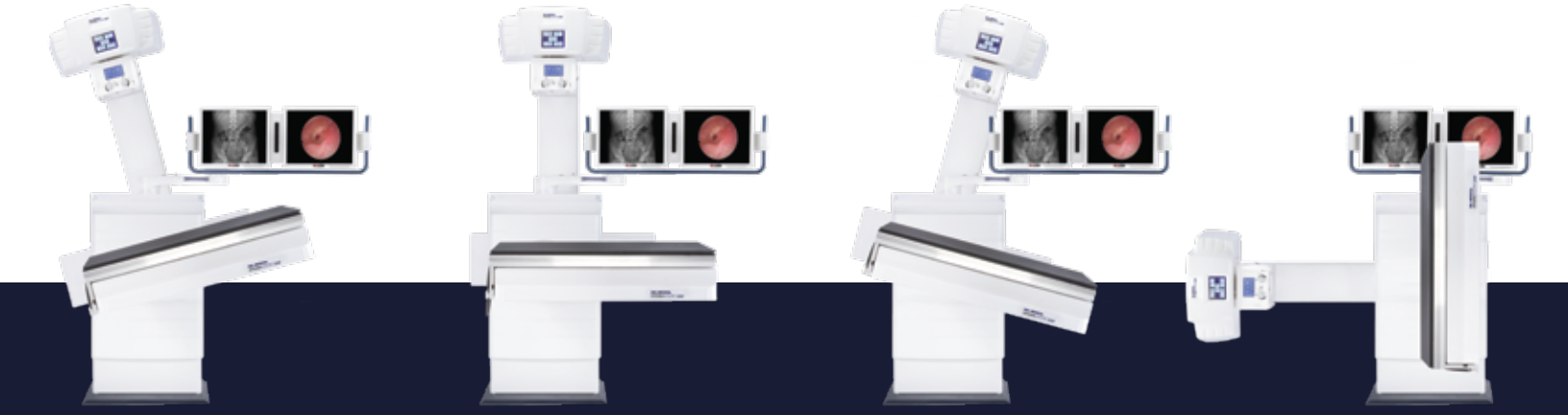

System Overview
CONSUMABLES

These disposables provide high-quality, cost-efficient solutions to help ensure fluid management in the imaging suite

Fluidrain LSS™ (Liquid Solidifications System) Container

The Fluidrain LSS container allows quick and easy collection of fluids for disposal when a floor drain is not present or permitted.

Uro Drain Bags

The uro drain bag is a disposable liner for the uro drain frame. Expandable tubing stretches to approximately 6 ft (182.9 cm) in length. Available in sterile or non-sterile packaging.

Uro Drain Extension Tubing

Used in conjunction with the uro drain bag, the extension tubing adds approximately 6 ft (182.9 cm) of length to the uro drain bag tube, for a combined length of approximately 12 ft (365.8 cm).

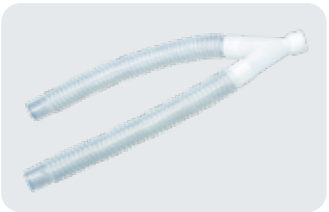

Uro Drain Y-Connector

The uro drain y-connector allows the attachment of multiple Fluidrain LSS containers for procedures requiring high fluid volumes.

Ordering Information

Package Description	Size	Quantity	Catalog #	Item #
Fluidrain LSS	10 Liter	10 Each	DM-HV-UDLSS10	337210
Fluidrain LSS	20 Liter	10 Each	DM-HV-UDLSS20	337220
Uro Drain Bags, Non-Sterile	N/A	10 Each	DM-HV-UDBNST	335900
Uro Drain Bags, Sterile	N/A	10 Each	DM-HV-UDBST	335901
Uro Drain Extension Tubing	6 ft (182.9 cm)	10 Each	DM-HV-UDEXT	337205
Uro Drain Y-Connectors	13 ft (330.2 cm)	10 Each	DM-HV-UDYCON	337200

Software Overview
HYDRAVISION™ WORKSTATION

The Hydra Vision HDIS offers a powerful digital image acquisition system designed to enhance patient workflow. It is a cost-effective solution that includes image processing algorithms for displaying digital images.

Designed to provide digital images with minimal user interaction, the Hydra Vision HDIS is an efficient solution for your digital imaging needs. Optimized workflow with this product will allow users to focus on the patient while capturing high-resolution images.

PAXSCAN® 4343CB

The PaxScan® 4343CB is specifically designed to meet the needs of fluoroscopic X-ray imaging applications featuring multiple sensitivity ranges and extended dynamic range modes. Excellent low-dose performance is achieved by combining proprietary readout electronics with the high sensitivity of a custom Cesium Iodide scintillator.

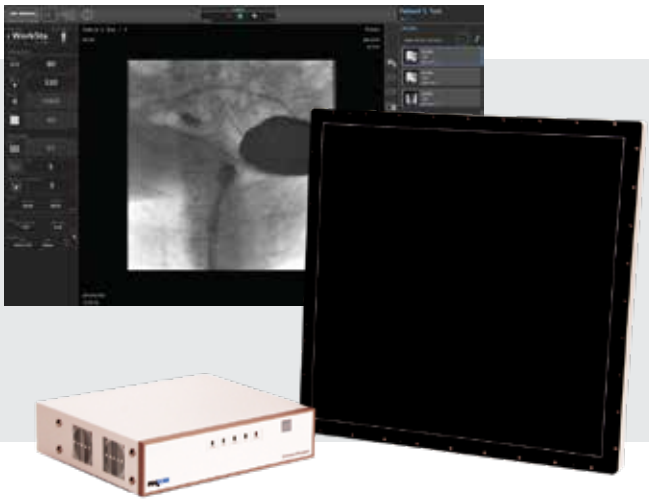

Software Features

- HIS/RIS work list support
- Configurable automatic study advance
- Over 500 preloaded exam profiles
- Accept/reject functionality
- Auto region of interest (ROI)
- Thumbnail image display
- Left/right markers with smart positioning
- Optimized workflow for fast patient throughput
- Measurement and annotation tools
- Free rotation
- Support for multiple languages
- Background multi-tasking hard copy allows simultaneous processing and remote service diagnostics
- Online and remote service diagnostics
- Image Stitching - multiple images into one image
- Customizable printing
- Basic radiation structured dose report
- JPEG export (including email)
- Reject Analysis Report
- vSharp® - scatter correction
- True Size Printing
- DICOM 3.0 and IHE conformance
- Image Gently - acquisition parameters based on patient age/size

HYDRAVISION™
TECHNICAL SPECIFICATIONS

Table Elevation Range:	31.5 - 50 in (78.7 - 127 cm) @ up to 1 in (2.5 cm) per second
Table Tilt Range:	-20 to +88 degrees @ up to 5 degrees per second
Imaging Window:	34 in (86 cm) of anatomy without moving the patient
Longitudinal Travel:	±10 in (25.4 cm) @ up to 1-1/2 in (3.8 cm) per second
Transverse Travel:	±6 in (15.2 cm) @ up to 1-1/2 in (3.8 cm) per second
Table Top Length:	43.5 in (110 cm)
Edge of Detector to Perineal End of Table:	3 in (7.6 cm)
Longitudinal Image Window:	36 in (91.4 cm)
Longitudinal Anatomical Coverage:	53.5 in (135.9 cm)
Image Distance from Table Top:	1.5 in (3.8 cm)
Source to Image Distance:	45.3 in (115 cm) Power assisted x-ray tube arm stores out of the way for patient convenience
Patient Weight Capacity:	750 lbs (340 kg)
Weight (Table Only):	1925 lbs (873 kg)
Power Requirements:	Table: 220 VAC ±10%, single phase, 50/60 Hz Generator: 400 - 480 VAC, 3-phase, 50/60 Hz

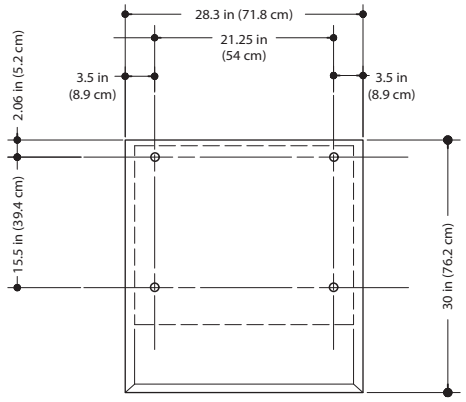

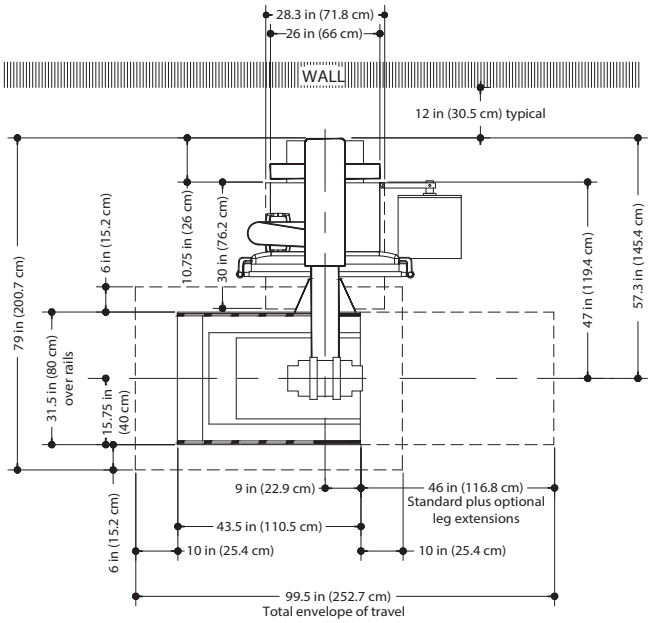

HYDRAVISION™ (Continued)

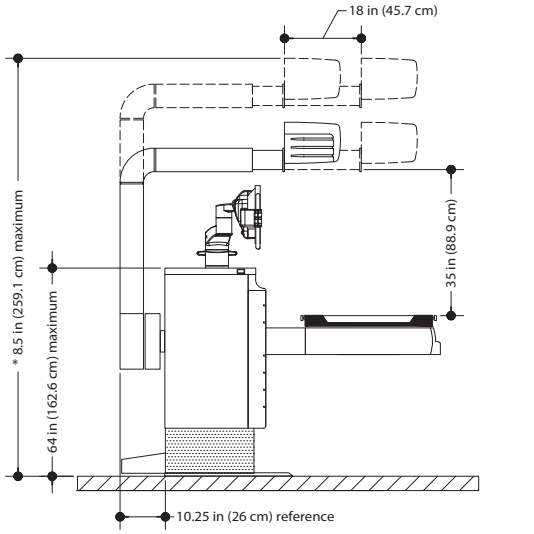

* MINIMUM 9'-0" CLEARANCE REQUIRED FOR UNRESTRICTED USE OF TABLE

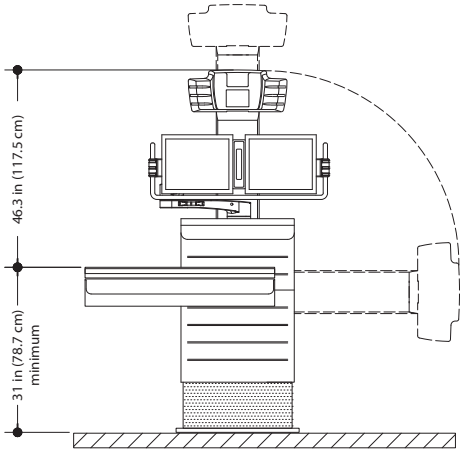

Workstation (Desktop)

Processor:	Intel Core family CPU (4th generation or later)
Memory:	8 GB RAM
Hard Disk Drive:	256 GB HD or SSD (not intended to be an archive device)
Operating System:	Windows 10 Enterprise LTSC
Peripherals:	Multi-touch monitor to enable touch capability / Keyboard and mouse fully supported

Dynamic Digital Detector

Receptor:	PaxScan 4343CB (A-Si)
Conversion Screen:	CsI:TI
Pixel Area:	16.8 x 16.8 in (42.7 x 42.7 cm)
Pixel Matrix:	3072 x 3072
Pixel Pitch:	139 µm
Limiting Resolution:	3.6 lp/mm (1x1) 1.8 lp/mm (2x2)
MTF (1 x 1) at 1 lp/mm:	54%
DQE (1 x 1, Quantum-Limited) at 0 lp/mm:	74%

> Continued on Next Page

Dynamic Digital Detector (Continued)

Contrast Ratio:	Large area (120 mm): <0.8% Small area (10 mm): <7%
Lag (1st Frame):	<3%
Maximum Entrance Dose / Frame Typical:	50 uGy
Dynamic Range:	94 dB std modes 108 dB DGS modes
Energy Range:	40 - 150 kVp
Fill Factor:	60.7%
Scan Method:	Parallel
Data Output:	LVDS, CameraLink
A/D Conversion:	16-bits
Dual/Dynamic Gain Modes:	>17-bits
Non-Uniformity:	1% maximum
Inactive Lines:	Less than or equal to 9 total rows and columns, minimum separation 16 lines
Inactive Pixels:	No inactive visible pixels after interpolation
Cooling:	Air cooling
Radiation Tolerance:	2000 Gy (active area)
Weight:	28.7 lbs (13 kg)

New York
28 Calvert Street
Harrison, NY 10528
(Tel) 800.261.9808
(Fax) 914.835.6111

Illinois
241 Covington Drive
Bloomingdale, IL 60108
(Tel) 800.800.6006
(Fax) 847.288.7011

www.delmedical.com